CD-adapco A Siemens Business ENERGY

IMPROVING COOLING EFFECTIVENESS OF GAS TURBINES THROUGH DESIGN EXPLORATION

JENS DICKHOFF
B&B-AGEMA, Germany

MASAHIDE KAZARI AND RYOZO TANAKA
Kawasaki Heavy Industries

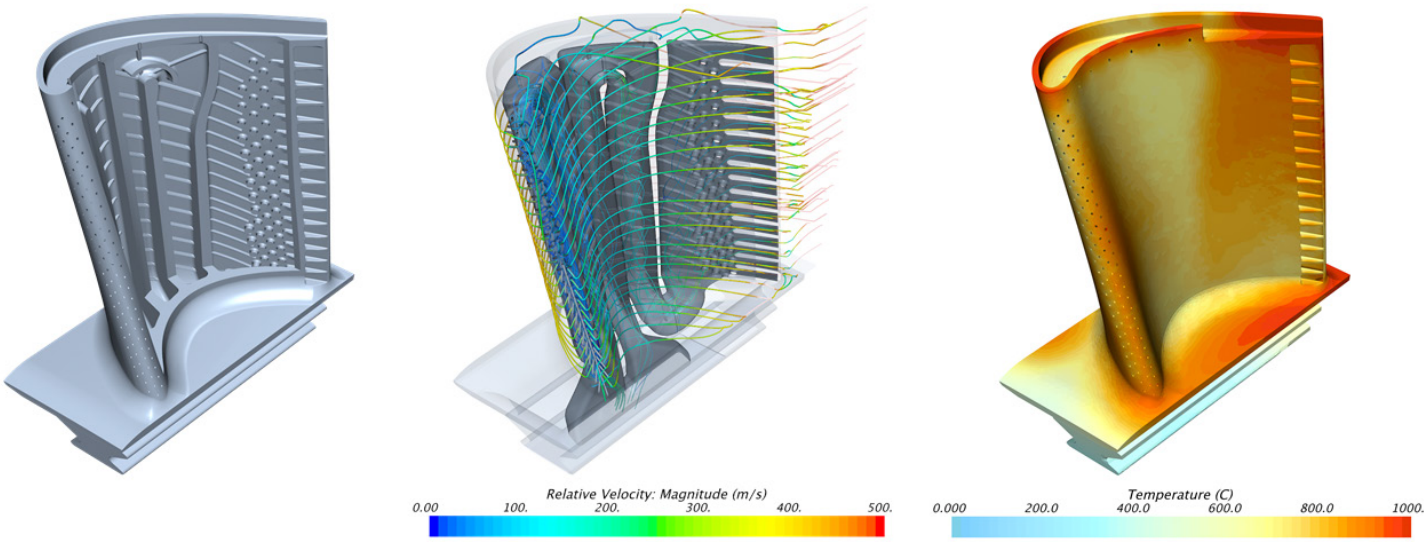

FIGURE 1: CFD simulation of gas turbine blade cooling

Finding ways to increase temperatures at the combustor exit and high-pressure turbine stage inlet is key to boosting the efficiency of gas turbines. But higher operating temperatures jeopardize the integrity of the high-pressure turbine components, especially the vanes and blades, since modern turbine stage inlet temperatures exceed the melting points of turbine blade materials. To combat this, turbine blade designs have incorporated a technique known as film cooling.

Cool air is bled from the compressor stage, ducted to the internal chambers of the blades and vanes, and discharged through small holes in the blade and vane walls. This air provides a thin, cool insulating layer along the surface of the blades and vanes. The L30A from Kawasaki Heavy Industries (KHI) is the world's most efficient gas turbine in its 30-megawatt power class. The L30A was developed by KHI with support from B&B-AGEMA GmbH, based in Aachen, Germany. Cooperation between B&B-AGEMA and KHI began in the 1990s when KHI sought help to apply CHT methods to improve cooling of its turbine blades. B&B-AGEMA developed novel film cooling technology that, instead of cylindrical holes, used fan-shaped holes to direct the flow of the air jets thereby increasing their cooling effectiveness.

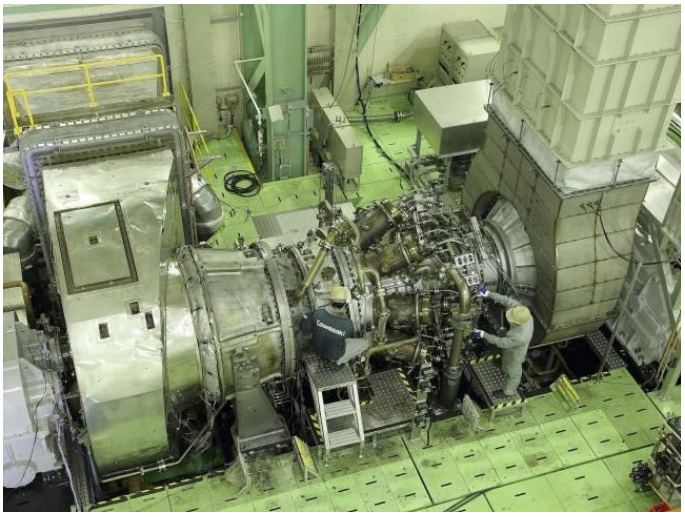

FIGURE 2: L30A on the heavy-duty gas turbine test rig at Kawasaki Akashi Plant, Japan

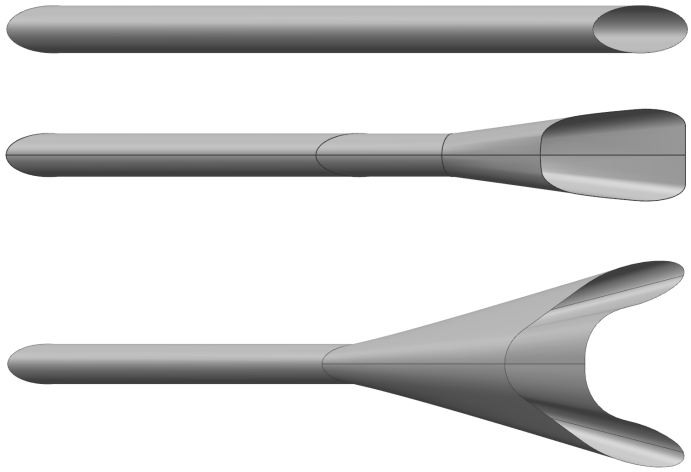

FIGURE 3: Film cooling hole geometries: cylindrical (top), fan-shaped (middle), nekomimi (bottom)

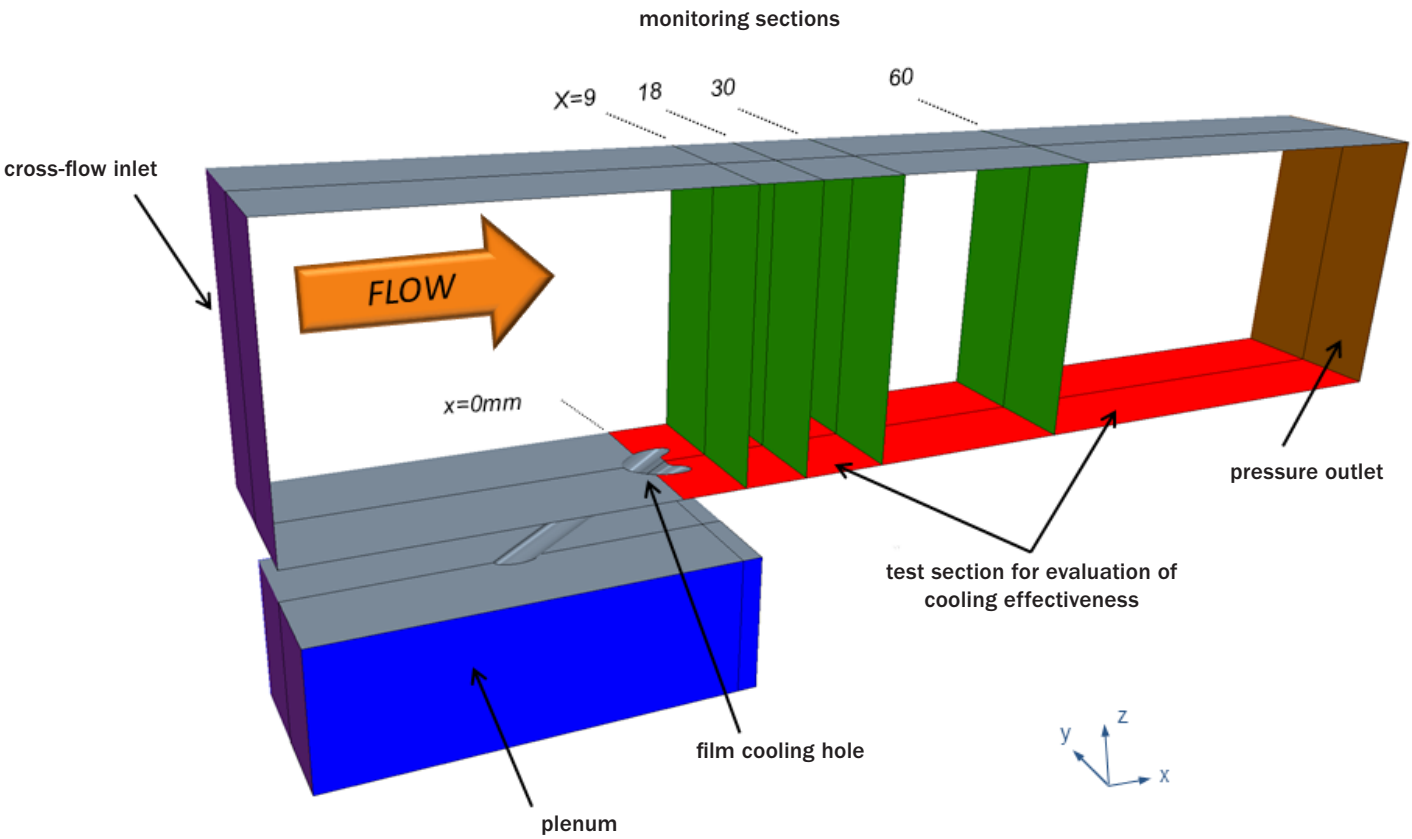

FIGURE 4: Computational domain used to virtually test the cooling effectiveness of different shaped holes

For some years, B&B-AGEMA and KHI applied STAR-CCM+® to perform design space exploration in a slow, iterative manner to study the cooling effectiveness of different shaped holes in gas turbine blades. This resulted in a technique known as double-jet film cooling as well as the more recent hole shapes that the two companies nicknamed "nekomimi" which is Japanese for cat's ears, reflecting the visual appearance of the holes.

The computational domain used to virtually test the cooling effectiveness of different shaped holes (Figure 4) consists of a main cross-flow duct and a plenum for the coolant supply, connected by the film cooling hole. The walls at the lateral sides are defined as symmetry planes in order to represent a row of film cooling holes. The domain width and length is equal for all configurations; this allows comparison between different cooling hole designs with similar coolant

Hole shape	Adiabatic film cooling effectiveness (0 – 1)	Cooling effectiveness (averaged value on scale from 0-1)	Mass flow rate [g/s]
Nekomimi		0.330	10.17
Fan	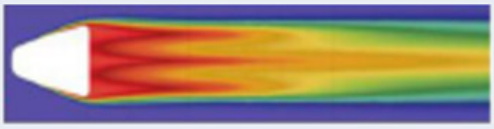	0.343	14.85

FIGURE 5: Comparison of cooling effectiveness and mass flow rate for a nekomimi vs. fan-shaped hole

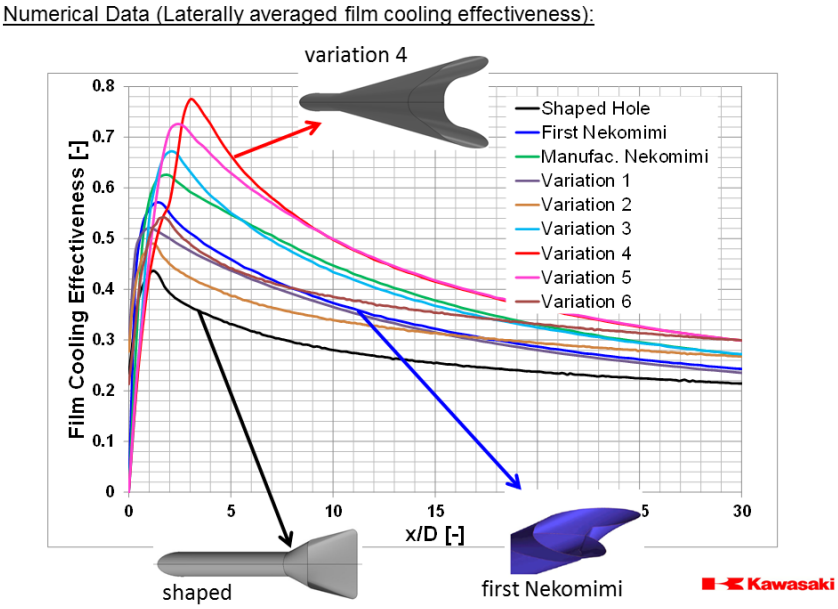

FIGURE 6: Film cooling effectiveness improved more than 200%

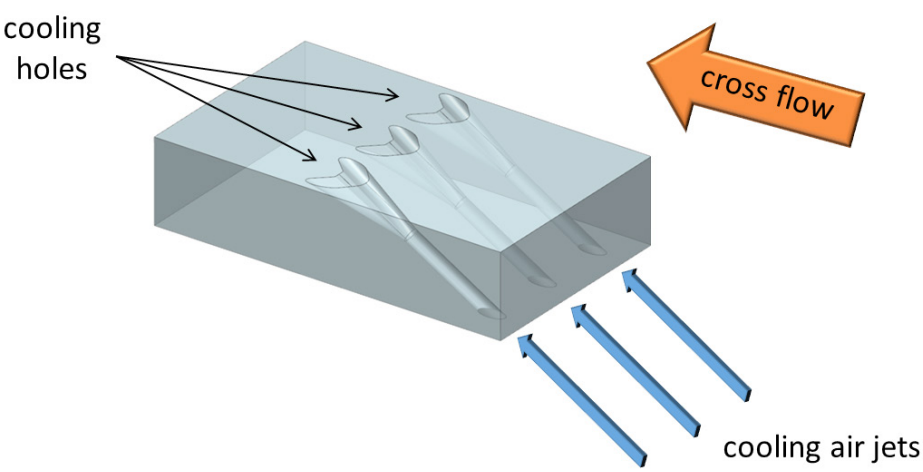

FIGURE 7: Each cooling hole is a jet in cross-flow

mass flow rates, as they have the same cooling air consumption per unit area. The adiabatic film cooling effectiveness has been spatially averaged on the surface highlighted in red.

As illustrated in Figure 5, for one particular comparison, a similarly-sized nekomimi hole results in approximately equal film cooling effectiveness at a significantly lower mass flow rate compared to the fan-shaped hole. Note that on the normalized scale from 0-1 that is typically used for cooling effectiveness, red=1 (better) while violet=0 (worse).

The result has been profound cooling improvements of 200% to 300% in the nekomimi designs over reference shaped holes – technology that has now been co-patented by KHI and B&B-AGEMA.

HOW FILM COOLING WORKS AND THE ADVANTAGE OF NEKOMIMI HOLES

The air used in the film cooling of gas turbines is extracted from the turbine's high-pressure compressor, so increasing the amount of air used for cooling decreases the thermal efficiency of the turbine. Furthermore, film cooling leads to mixture losses and reduced total temperature within the hot gas passage of the turbine. These inefficiencies can be ameliorated by finding ways to reduce the amount of cooling air needed, and to establish a more homogenous solid temperature distribution.

The cooling fluid injection through a hole leads to a "jet in cross-flow" situation, shown in Figure 7. Secondary flow structures, including rotating vortices, are generated by interaction between the coolant jet and the cross-flow which can degrade film cooling effectiveness.

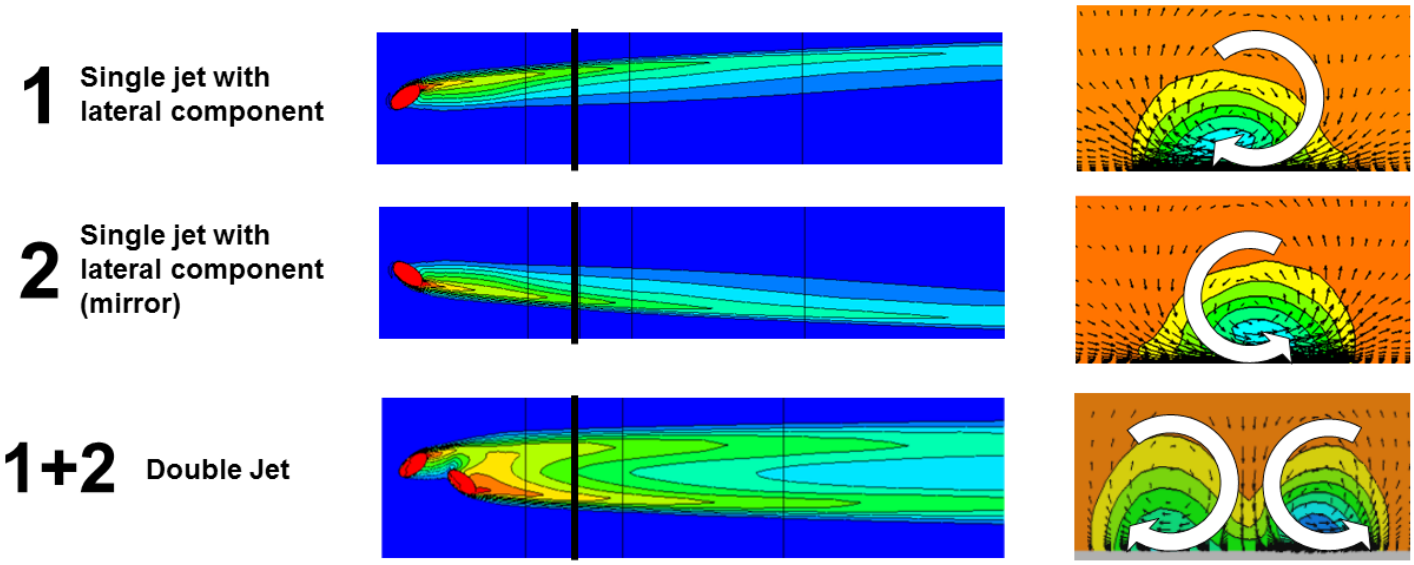

FIGURE 8: Double-jet film cooling

These degradations can be remedied by using a shaped-hole exit instead of a round hole, which leads to reduced momentum flux ratio between the coolant and cross flow at the cooling-hole exit (caused by the flow deceleration inside the diffusor part of the shaped hole), and a Coandă effect which facilitates the flow hugging the wall behind the hole.

To reduce the undesirable mixing between the coolant and the hot gas, thus preserving a cooling layer near the surface of the turbine blade, double-jet film cooling (DJFC) technology was introduced by B&B-AGEMA engineers in 1999.

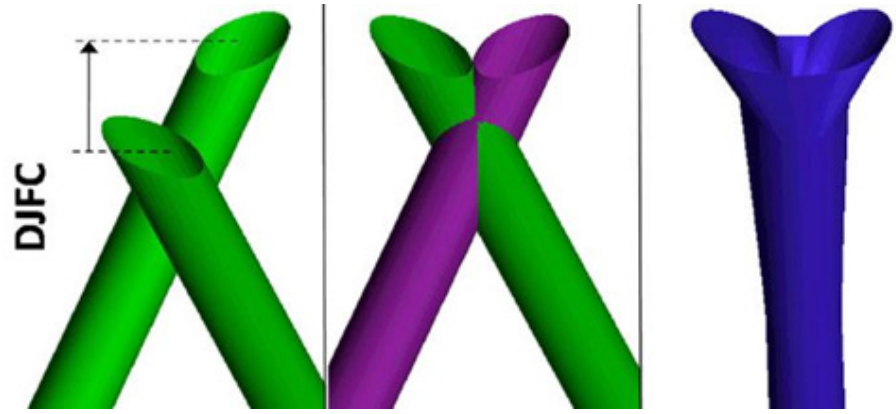

FIGURE 9: Nekomimi design concept a) Step 1 (DJFC) b) Step 2 c) Step 3 (nekomimi)

THE NEKOMIMI TECHNOLOGY

In 2008, B&B-AGEMA debuted a novel hole design derived from the DJFC concept – the nekomimi technology. This combines the two cylindrical holes of the DJFC within a single hole design to overcome the inefficiency of the air supply situation. The evolution of this is shown in Figure 9.

DESIGN SEARCH PROCEDURE

Recently B&B-AGEMA and KHI decided to automate their design search through the use of HEEDS, the design exploration software from CD-adapco's Red Cedar Technology subsidiary, and the HEEDS-based Optimate+™ add-on module for STAR-CCM+. This change makes it possible for them to evaluate hundreds of designs in the time previously required to assess just a handful, methodically comparing large numbers of traditional fan-shaped hole designs to nekomimi-shaped holes.

Engineers from KHI and B&B-AGEMA worked with CD-adapco to carry out an intelligent and automated search of the design landscape to identify nekomimi designs meeting conflicting objectives: low coolant mass flow rate and high adiabatic film cooling effectiveness on the test section. The parameters defining the shape of the nekomimi holes (Figure 10) were varied over 349 fluid dynamic simulations to generate a Pareto frontier of designs representing the best tradeoffs between the two objectives. Additionally, the design landscape of a laidback fan-shaped film cooling hole was searched over 299 simulations as reference in order to show the advantages of the nekomimi technology.

Optimate+ was used for the automated design exploration process, STAR-CCM+ for fluid flow and heat transfer simulation as well as geometry modeling of the fan-shaped holes, Siemens NX for parametric geometry modeling of the nekomimi-shaped holes, and HEEDS Post for visualizing and interpreting results, outlined in Figure 11.

Optimate+ selects a set of design parameters and requests the CAD modeler to generate updated geometry. Then Optimate+ directs STAR-CCM+ to import the new geometry, automatically create an appropriate discretized mesh of the solution domain, and simulate the fluid flow and heat transfer. Optimate+ interactively reports the simulation results and predicted performance characteristics back to the engineer through a visualization tool named HEEDS Post.

Optimate+ intelligently uses the performance metrics to select a new set of design variables for the hole shape and repeats the process in an effort to discover better performing designs in a limited number of design evaluations. The engineer is also free to collaboratively influence the search by injecting designs to be evaluated based on intuition.

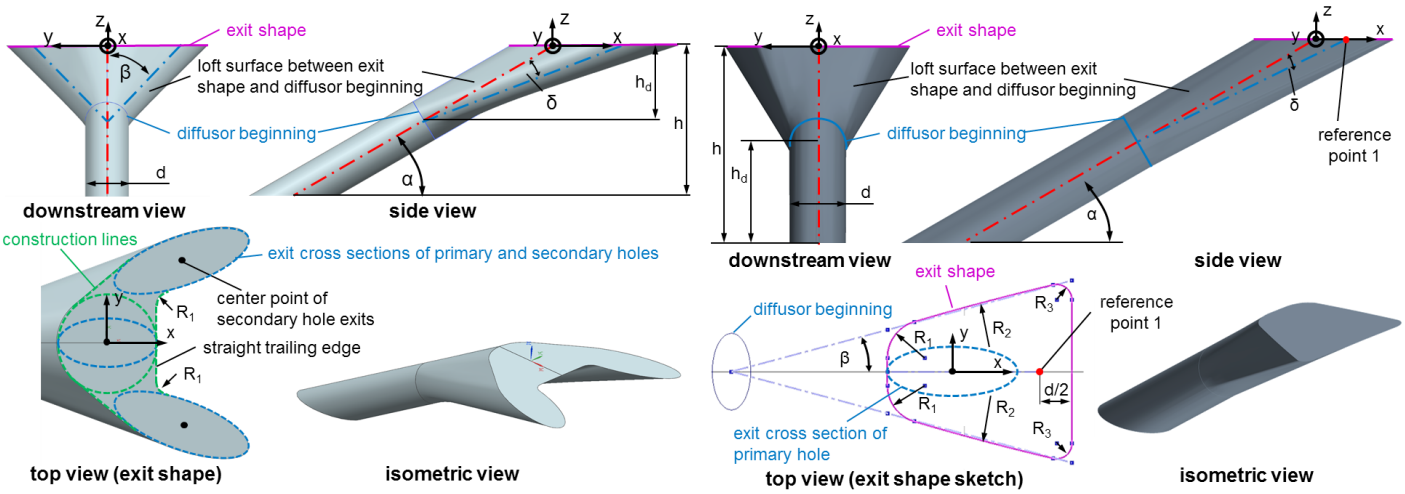

FIGURE 10: Nekomimi design parameters (left); reference fan-shaped-hole parameters (right)

DESIGN EXPLORATION RESULTS

The review of the results of the best possible hole shape is demonstrated by the Pareto front in Figure 12 and shows the best-possible nekomimi holes (blue dash-dotted line) and fan-shaped holes (red dash-dotted line) within the design space. These fronts show that the nekomimi technology has significantly better spatially-averaged film cooling effectiveness for coolant mass flow rates between 8 g/s and 17 g/s. Below and above that range, both cooling hole concepts can reach comparable values for cooling effectiveness.

Also, analysis of two representative sets of simulation results (black dashed-line boxes) shows that for fan-shaped cooling holes, when the design parameters are not carefully chosen, counter-rotating vortices dominate the secondary flow structures and worsen the cooling effectiveness. In contrast, the nekomimi shape delivers more consistently effective cooling performance across a wide range of design parameters.

This novel approach makes it possible to build a database of the best nekomimi cooling-hole designs for a variety of pressure ratios and coolant mass flow rates. From this database, cooling-design engineers can select the best design to achieve higher cooling effectiveness and lower cooling air consumption (Figure 12).

For all kinds of film cooling holes, this study strongly enhances basic understanding of secondary flow phenomena and their impact on cooling effectiveness. Further, it proves the value of automated design space exploration for solving a broad range of standard engineering problems.

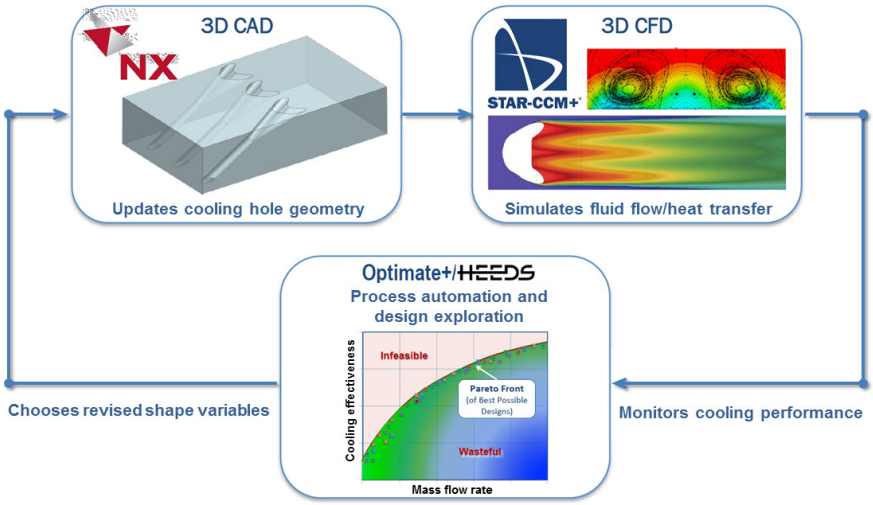

FIGURE 11: Automated design exploration procedure

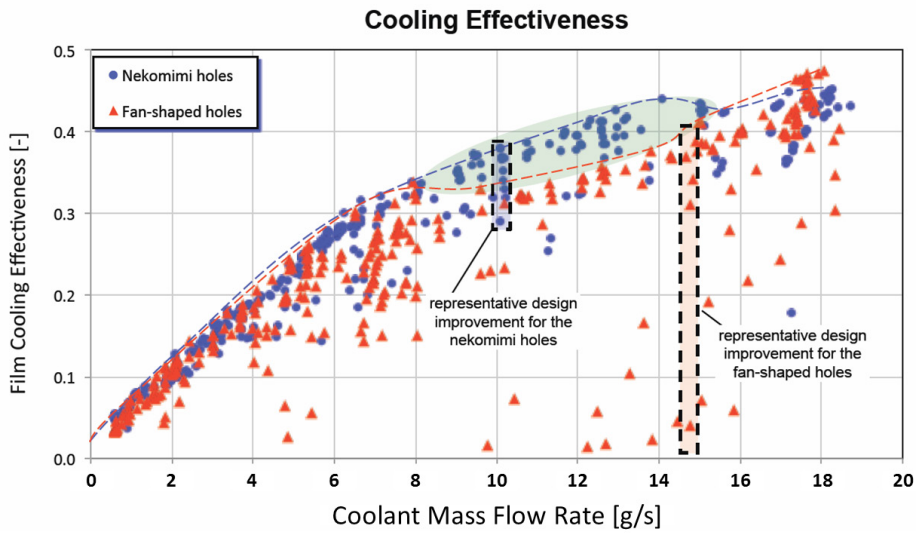

FIGURE 12: Film cooling effectiveness for all tested nekomimi and fan-shaped film cooling hole